BEAM PROPERTIES

A_B = 418,200 mm^2
I_B = 15,122 x 10^6 mm^4
S_{TB} = 56,364 x 10^3 mm^3
S_{BB} =57,126 x 10^3 mm^3
Y_{TB} = 268.3 mm
Y_{BB} = 264.7 mm
Wt. = 9.85 kN/m

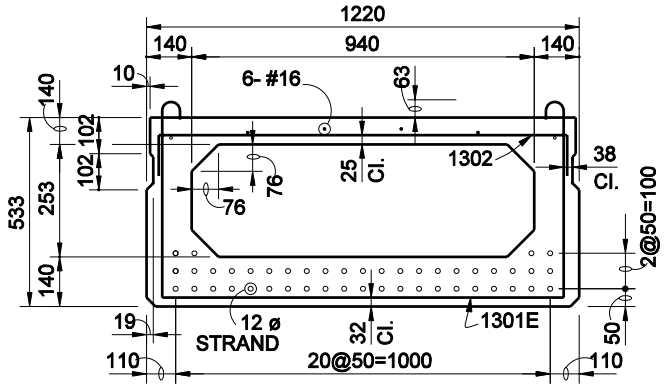

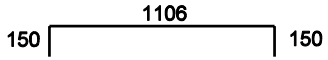

1302 x 1406

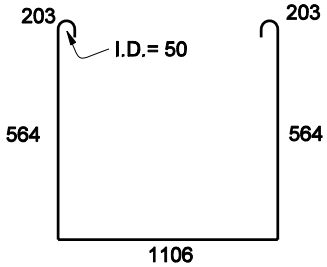

1301E x 2640

NOTE:
USE 50 ø PIN FOR
BENDING ALL BARS.

BOX BEAM
TYPE CB 533x1220
Figure 63-15 I